ETTINGER
Elektronik-Bauelemente

Article datasheet

Batteryholder 2 x Micro "AAA" cells for PCB mounting

Article-No.: 015.12.632

Image may be similar

Battery Type:	AAA-Micro
Flammability Class:	UL94-HB
Material:	PP - Polypropylene
Model:	PCB Mounting Connection
No. Cells:	2
Weight:	4.9g
Conformities:	Reach COMPLIANT, RoHS COMPLIANT, SVHC COMPLIANT

You can find all information on the web on our article detail page

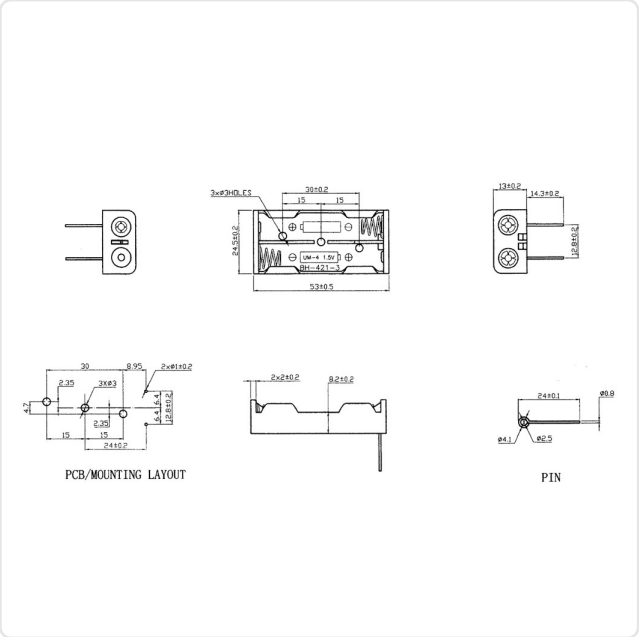

Would you like individual advice?
We look forward to your email to products@ettinger.de.

Subject to change and errors.

ETTINGER GmbH

Ottostraße 5 | 85649 Hofolding | Deutschland | www.ettinger.de | info@ettinger.de | + 49 8104 66 23 88